GCT
Metallurgical Process Specialists

# Selected Ferrous Operations Case Histories


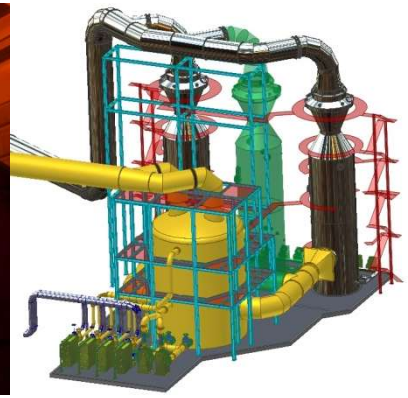

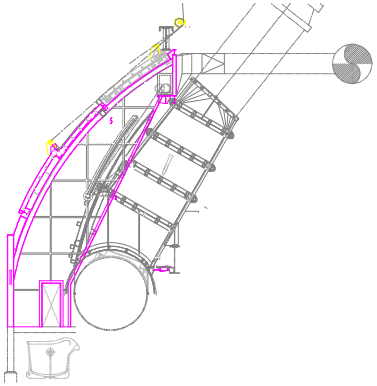

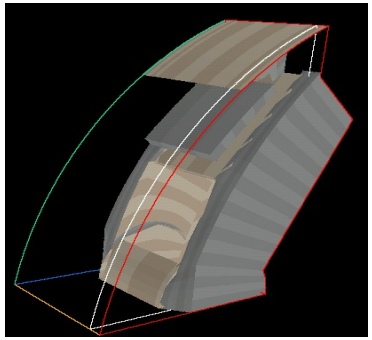
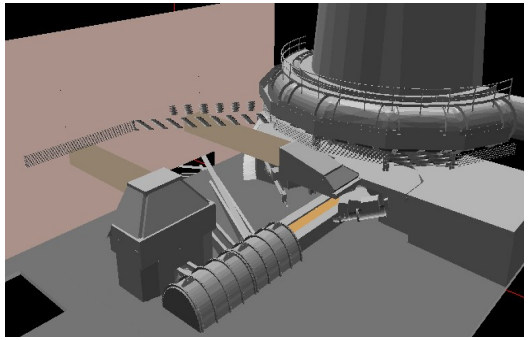

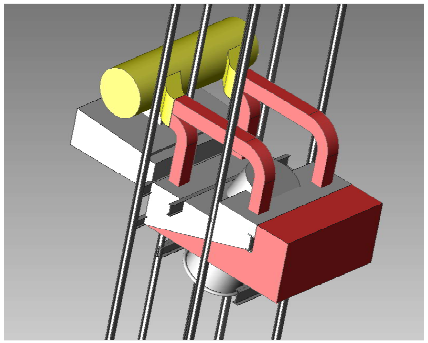
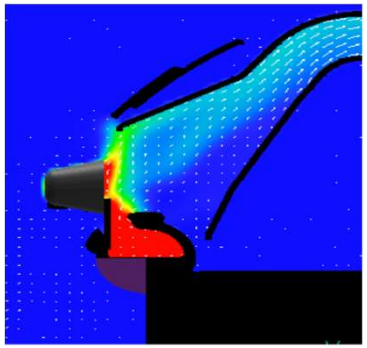

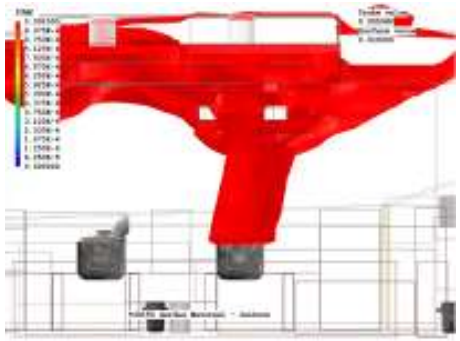

GCT
Metallurgical Process Specialists

# Meltshop Emissions Reduction Case History

## Electric Arc Furnace Off-Gas System Design

**Client:** **Nucor Steel**
**Location:** **Jewett, TX**

Preliminary and Detail Design and Commissioning of a New Off-Gas System for a new Electric Arc Furnace Meltshop.

- EAF Primary and Secondary Fume Collection Design
- LMF and Caster Canopy Fume collection Design
- 1,680,000 ACFM Reverse Air Baghouse Design
- Optimized EAF canopy hood and meltshop design through Computational Fluid dynamic (CFD) modeling
- Detail Engineering – Process, mechanical, and electrical/instrumentation
- Equipment Sizing, Specification Preparation, and Bid Evaluation
- Total Drawings: 140
- Commissioning and Performance Testing

**Project History**

| | |
|---|---|
| Basic Engineering | March 2002 |
| Detail Engineering | June 2002 |
| Startup | May 2004 |
| Hot Commissioning | July 2004 |

New EAF Off-Gas System

GCT
Metallurgical Process Specialists

# Meltshop Emissions Reduction Case History

## Electric Arc Furnace Off-Gas System Design

**Client:** **Nucor Steel**
**Location:** **Memphis, TN**

Preliminary and Detail Design of a New Off-Gas System for a new Electric Arc Furnace Meltshop.

- EAF Primary and Secondary Fume Collection Design including LMF and Caster Canopy Fume collection
- 1,200,000 ACFM Reverse Air Baghouse Design
- Optimized EAF canopy hood storage volume through Computational Fluid dynamic (CFD) modeling
- Detail Engineering – Process, mechanical, and structural
- Equipment Sizing, Specification Development
- Total Drawings: 128
- Commissioning and Performance Testing

**Project History**

| | |
|---|---|
| Basic Engineering | January 2007 |
| Detail Engineering | March 2007 |
| Startup | April 2008 |

New EAF Off-Gas System

GCT
Metallurgical Process Specialists

# Meltshop Emissions Reduction Case History

## Electric Arc Furnace Off-Gas System Design

**Client:** **Nucor-Yamato Steel**
**Location:** **Blytheville, AR**

Preliminary and Detail Design of a New EAF Canopy Baghouse System for an existing Electric Arc Furnace Meltshop.

- EAF Secondary Fume Collection Design
- 1,300,000 ACFM Reverse Air Baghouse Design
- Optimized EAF canopy hood design through Computational Fluid dynamic (CFD) modeling
- Detail Engineering – Process, mechanical, civil, structural, electrical, & instrumentation
- Equipment Sizing & Specification Development
- Total Drawings: 358
- Construction still underway with a target for Fall 2009 startup following their fall shutdown

**Project History**

| | |
|---|---|
| Basic Engineering | November 2006 |
| Detail Engineering | August 2008 |

New EAF Canopy Baghouse Construction

GCT
Metallurgical Process Specialists

# Meltshop Emissions Reduction Case History

## Meltshop Air Pollution Control System Evaluation

**Client:** **Nucor Steel**
**Location:** **Berkeley, SC**

Outline cost effective improvements to reduce heat and dust exposure in the EAF aisle and reduce fugitive emissions from the roof monitors

- **Air Pollution Control Systems Review:**
  - System pressure losses and flow distribution using AFT's Fathom software
  - Canopy hoods, LMF hoods, and spray chamber performance
  - Baghouse modifications

- **Melt Shop Building CFD Analysis:**
  - Model calibrated with ventilation surveys, plume photography, and temperature measurements.
  - Impact of various melt shop modifications to building ventilation patterns.

- **Order of Magnitude Capital Cost Estimate for Recommended Modifications**

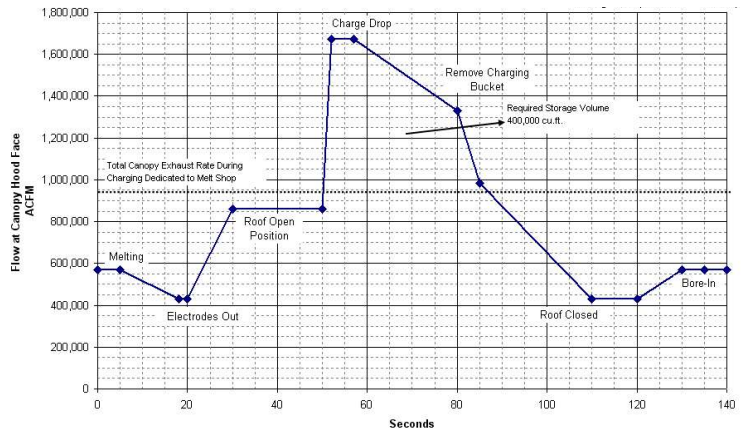


*Video Plume Analysis*

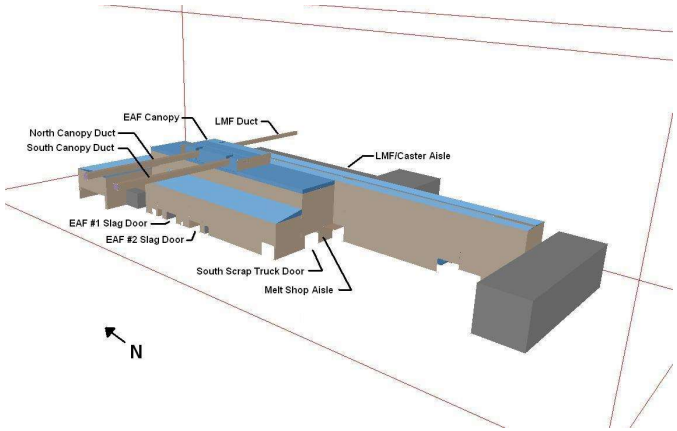


*CFD Model Geometry*

**Project History**

Study Complete January 2004

GCT
Metallurgical Process Specialists

# Meltshop Emissions Reduction Case History

## "B" Furnace DEC Improvements Study

**Client:** **Gerdau Ameristeel**
**Location:** **Midlothian, TX**

Evaluate performance of direct evacuation control (DEC) system and recommend improvements to reduce erosion and maintenance requirements.

- **Field Data Collection**
  - Impact of individual heat sources on hood capacity.
  - Model calibration via ventilation survey.
- **Data Analysis**
  - Concepts based on CFD modeling.
  - Detail engineering of hood, plenum and duct modifications.
  - Damper control strategy for exhaust control.
  - Equipment specifications and selections.
- **General Arrangement Drawings**
- **Order-of-magnitude capital cost estimate**

**Project History**
Study Complete June 2007

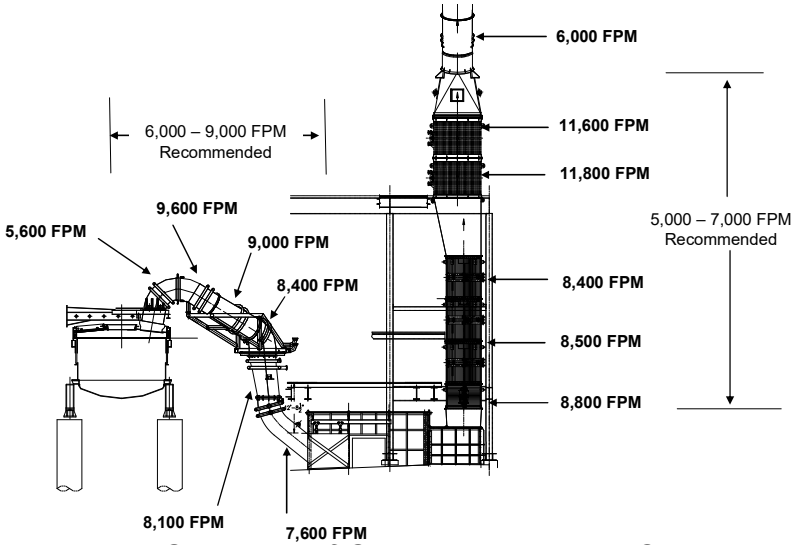


*Summary of Gas Velocities in DEC*

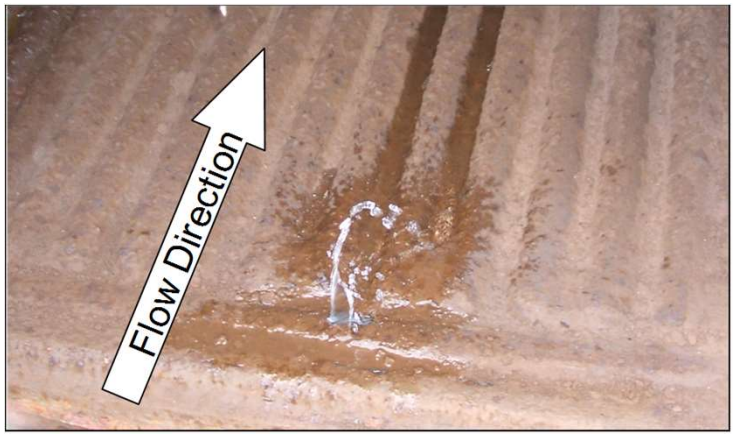


*Water-Cooled Ductwork With Water Leaks*

GCT
Metallurgical Process Specialists

# Meltshop Emissions Reduction Case History

## MELTSHOP EMISSIONS SYSTEM STUDY & OFF-GAS COOLING SYSTEM UPGRADES

**Client:** **SSAB**
**Location:** **Montpelier, IA**

Initial engineering study to evaluate the performance of the existing melt shop fume collection system and make recommendations to improve performance. Study lead to a Detail Design project of an in-duct peak shaver spray system to cool the DEC off-gas.

**Study Scope Of Work:**

- Complete analysis and the emission control system operation and performance.
- CFD modeling to evaluate the impact of modifications on the meltshop conditions
- Develop short and long term recommendations to improve the performance of the emission control system

**In-Duct Spray System Design:**

- Nozzle sourcing and selection.
- Air and water line sizing, instrumentation, and control system design.
- Peak shaver location, nozzle orientation, and equipment layout design.

**Project History**

Complete November 2004

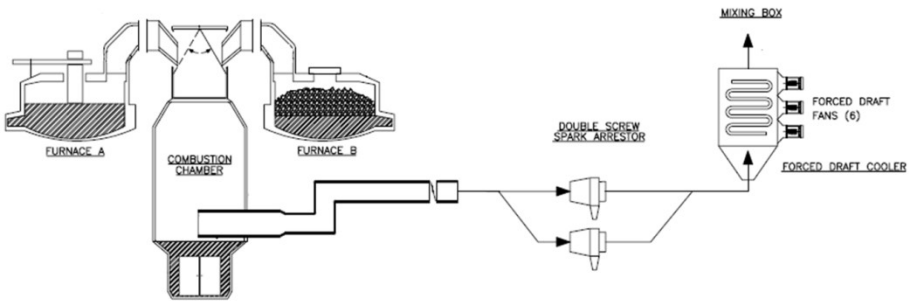


*Original DEC System Design*

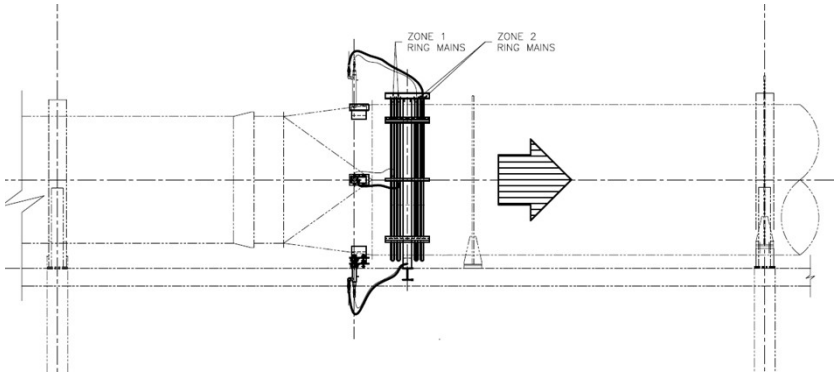


*Optimized System Design Included*
*New In Duct Spray System Nozzle Arrangement*

GCT
Metallurgical Process Specialists

# Meltshop Emissions Reduction Case History

## 6% Opacity Study

**Client:** **Gerdau Ameristeel**
**Location:** **Sand Springs, OK**

Recommend modifications designed to ensure the client can maintain compliance with the EPA opacity mandate while continuing operation of the furnaces in the existing meltshop

- **Meltshop CFD Analysis**
  - Evaluate impact of various building modifications on canopy hood capture efficiency
  - Determine required canopy hood exhaust rate to achieve emission targets
- **Furnace Process Optimization**
  - Develop recommendations to improve EAF energy efficiency and improve furnace productivity
  - Recommend process modifications design to reduce EAF emissions
- **Conceptual drawings to illustrate the recommended modifications**
- **Order of magnitude cost estimate for the recommended modifications**

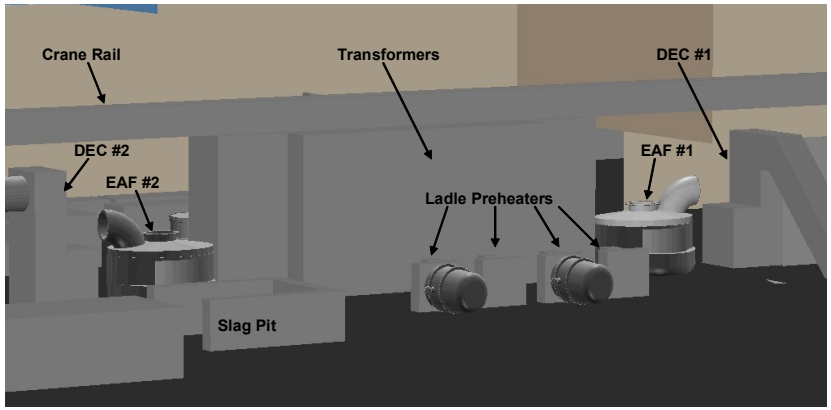


*CFD Model Geometry*

**Project History**
Study Completed February, 2009

GCT
Metallurgical Process Specialists

# Meltshop Emissions Reduction Case History

## Meltshop Fume Collection System Study

**Client:** **Gerdau Ameristeel**
**Location:** **Sand Springs, OK**

Evaluate three alternative future operating scenarios to select the optimal solution that will ensure future compliance with EPA opacity mandates

- **3 Future Operating Scenarios**
  - Utilize the (2) existing EAFs and upgrade the existing fume collection system
  - Modernize (1) existing EAF to meet production with a single furnace and upgrade the existing fume collection system
  - Install a new meltshop with a single modern EAF and utilize the existing fume collection system

- **Analysis Included:**
  - Process evaluation of the existing EAF
  - CFD analysis of each option to determine required canopy hood exhaust rates and required building modifications
  - Benchmarking of similar operations
  - Capital cost estimate of each option

**Project History**
Study Complete August 2008

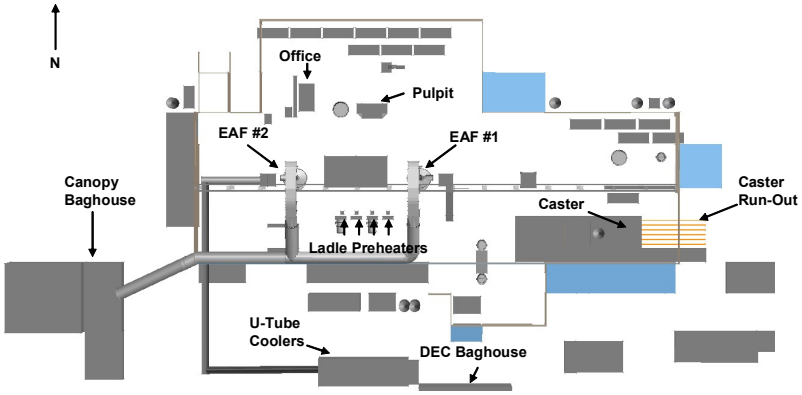


*CFD Model Geometry*

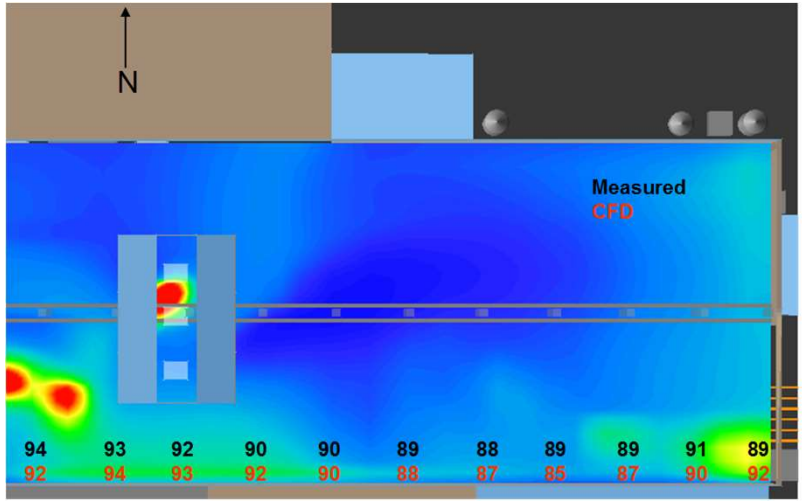


*CFD Model Validation*

GCT
*Metallurgical Process Specialists*

# Meltshop Emissions Reduction Case History

## CEM Location Optimization

**Client: Gerdau Ameristeel**
**Location: Petersburg, VA**

Develop a Computational Fluid (CFD) model of the EAF and canopy ductwork in order to predict the extent of mixing of the two gases and optimize the location of the continuous emissions monitor (CEM) probes

- **Field Data Collection to Establish Flow Rates and Temperatures**
- **CFD Modeling**
  - Prepare 3D Model Geometry
  - Prepare Model Boundary Conditions
  - Run Model Scenarios to Determine Optimum Probe Location for Unbiased Measurements
- **Drawings of Recommended Probe Location and Configuration**
- **Estimate for Potential Measurement Bias**

**Project History**
Study Complete January, 2004

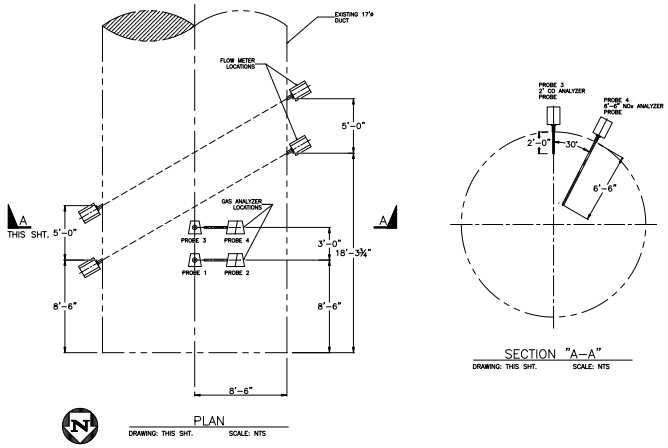


*CEM Probe Arrangement*

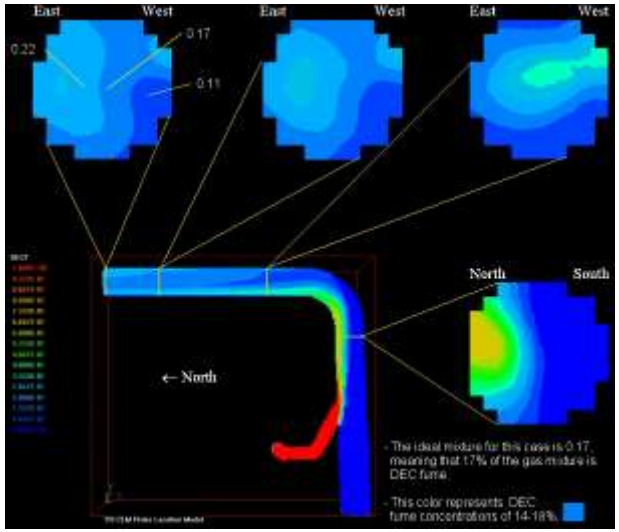


*CFD Analysis of EAF and Canopy Gas Mixing*

GCT
Metallurgical Process Specialists

# Meltshop Emissions Reduction Case History

## Baghouse System Definitive Cost Estimate

**Client:** **NorthStar BlueScope Steel**
**Location:** **Delta, OH**

Developing a detailed capital cost estimate for implementation of a new baghouse system

- **Air Pollution Control Systems Review:**
  - System pressure losses and flow distribution model using AFT's Fathom software.
  - Canopy hood performance evaluation using CFD modelling.
  - Evaluating existing system capacity and limitations.

- **Equipment Sizing and Costing:**
  - Furnace and off-gas system mass and energy balances.
  - Baghouse, fan, and ductwork sizing.
  - Obtaining bids for major equipment items.
  - Material take-offs for fabricated components.
  - Developing a definitive cost estimate for implementing an expansion baghouse system.

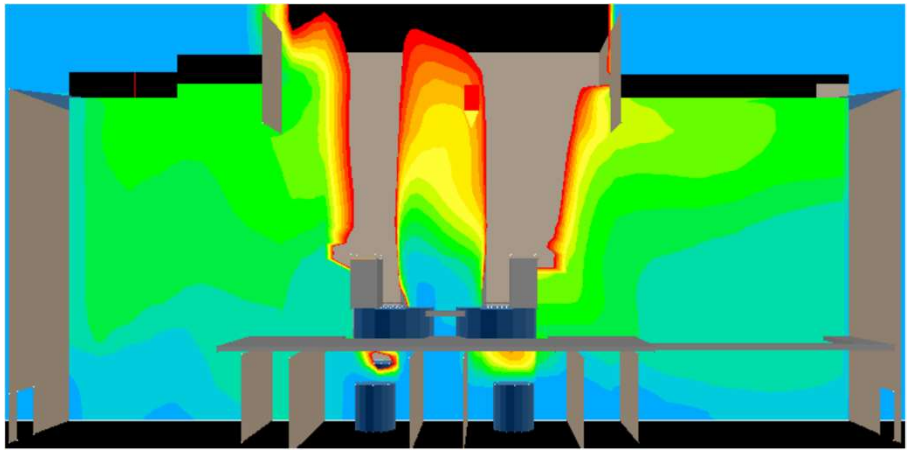

*Meltshop CFD Temperature Profile – 1 Charging & 1 Melting*

**Project History**
Study Complete November 2004

GCT
Metallurgical Process Specialists

# Meltshop Emissions Reduction Case History

## Meltshop Fume Collection System Study

**Client:** **Gerdau Ameristeel**
**Location:** **Beaumont, TX**

Recommend modifications designed to ensure the client can maintain compliance with the EPA opacity mandate while continuing operation of the furnaces in the existing meltshop

- **Meltshop CFD Analysis**
  - Evaluate impact of various building modifications on canopy hood capture efficiency
  - Determine required canopy hood exhaust rate to achieve emission targets
- **Furnace Process Optimization**
  - Develop recommendations to improve EAF energy efficiency and improve furnace productivity
  - Recommend process modifications design to reduce EAF emissions
- **Conceptual drawings to illustrate the recommended modifications**
- **Order of magnitude cost estimate for the recommended modifications**

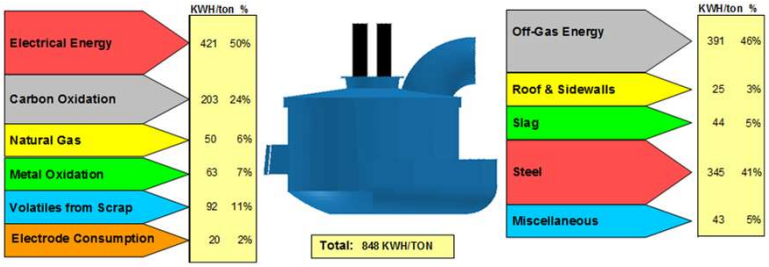


*EAF Energy Balance Sankey Diagram*

**<u>Project History</u>**
Study Complete March, 2008

GCT
Metallurgical Process Specialists

# Meltshop Emissions Reduction Case History

## 6% Opacity Attainment

**Client:** **Gerdau Ameristeel**
**Location:** **Beaumont, TX**

Study and Basic engineering of modifications to the air pollution control system and meltshop designed to meet regulatory compliance

- EAF canopy hood modifications designed to increase the storage volume and optimize fume capture
- Meltshop modifications designed to reduce the effects of cross-drafts on fume capture
- Design of a new water-cooled drop-out box
- Design of a new 400,000 ACFM baghouse, fans, and dust handling system
- Design of a new draft control system

**Project History**
Basic Engineering 2009

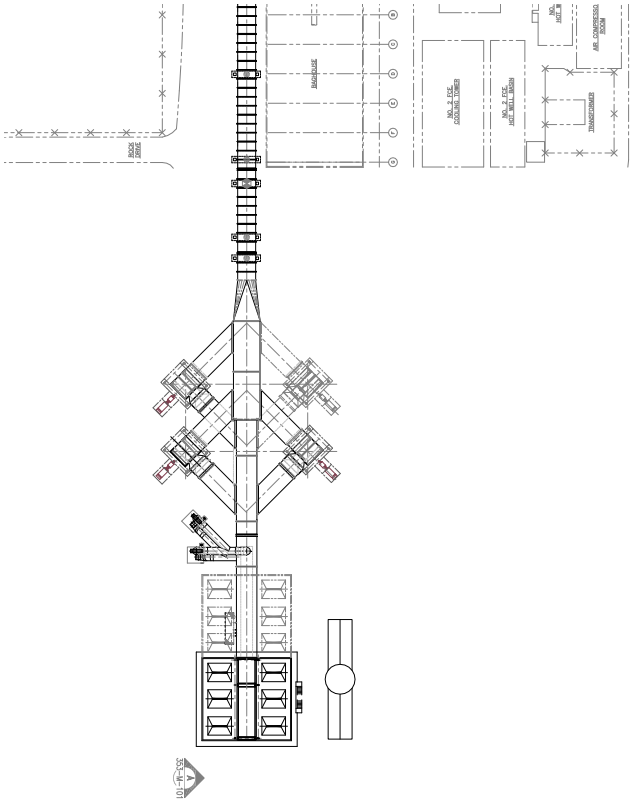


*Baghouse Addition*

GCT
Metallurgical Process Specialists

# Meltshop Emissions Reduction Case History

## Meltshop Fume Collection System Study

**Client:** **Gerdau MACSTEEL**
**Location:** **Jackson, MI**

Recommend modifications designed to ensure the client can maintain compliance with the EPA opacity mandate while continuing operation of the furnaces in the existing meltshop

- **Meltshop CFD Analysis**
  - Evaluate impact of various building modifications on canopy hood capture efficiency
  - Determine required canopy hood exhaust rate to achieve emission targets
- **Furnace Process Optimization**
  - Develop recommendations to improve EAF energy efficiency and improve furnace productivity
  - Recommend process modifications design to reduce EAF emissions
- **Conceptual drawings to illustrate the recommended modifications**
- **Order of magnitude cost estimate for the recommended modifications**

**Project History**

| | |
|---|---|
| Study Complete | July, 2008 |
| Basic Engineering | April, 2009 |
| Detail Engineering | April, 2010 |

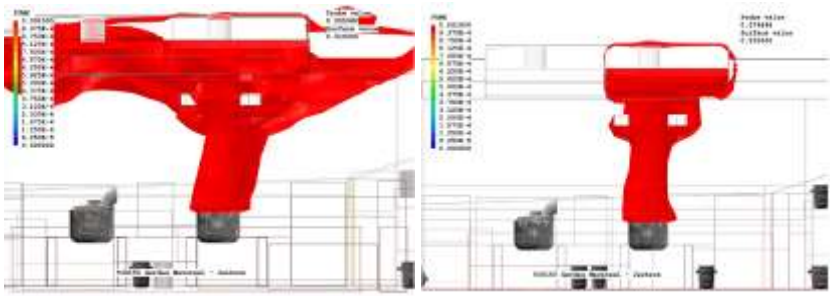

*Existing* *Future*
*CFD Predicted Canopy Hood Performance*

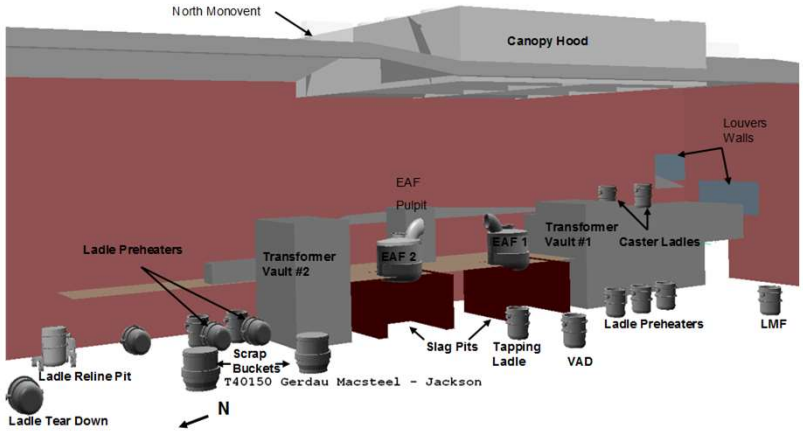


*CFD Model Meltshop Geometry*

GCT
Metallurgical Process Specialists

# Meltshop Emissions Reduction Case History

## Meltshop Air Pollution Control System Evaluation

**Client:** **Evraz**
**Location:** **Claymont, DE**

Evaluate the performance of the existing meltshop air pollution control system and make recommendations to improve emissions capture from the various sources within the meltshop.

- **Air Pollution Control Systems Review:**
  - Complete analysis and evaluation of the current air pollution control system
  - Computational Fluid Dynamic (CFD) model of the meltshop:
    - Evaluate various ventilation scenarios
    - Optimize canopy hood design
    - Optimize canopy hood exhaust rates
    - Reducing meltshop openings
  - Provide short term recommendations to improve the APC system with minimal capital expenditure
  - Provide long-term recommendations optimize exhaust rates to all fume collection points and minimize meltshop fugitive emissions

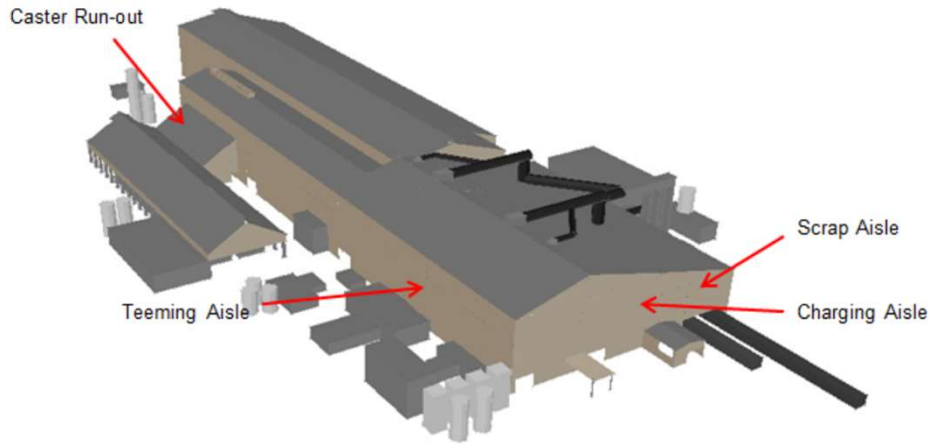


*Meltshop CFD Model Geometry*

**Project History**

| | |
|---|---|
| Study Complete | September 2010 |
| Basic Engineering | December 2010 |
| New Off-Gas System Optimization | June 2013 |

GCT
Metallurgical Process Specialists

# Meltshop Emissions Reduction
# Basic Engineering

## Meltshop Air Pollution Control System Basic Engineering

**Client:** **Evraz**
**Location:** **Claymont, DE**

Basic Engineering to refine the design and specifications of the recommended meltshop modifications to the level required to go out for Engineering Procurement Construction, EPC (turnkey) bids for the project.

*New Baghouse*

- **Scope of Work:**
  - Finalize process design basis, PFD, and control philosophy
  - Define, specify and size major equipment for project
  - Finalize baghouse location, arrangement, and sizing
  - Conduct structural analysis of the meltshop and assess upgrade requirements
  - Develop basic general arrangement drawings of the proposed equipment layout and ductwork routing
  - Develop equipment performance specifications to be issued to potential EPC contractors for bids
  - Develop master schedule for project based on critical path milestones
  - Develop work breakdown structure and cost breakdown structure with a detailed cost estimate (+/- 20% accuracy).
  - Perform constructability review and develop preliminary HSE and construction management plan.
  - Develop scope of work and bid package for EPC bidders

**Project History**

| | |
|---|---|
| Study Complete | September 2010 |
| Basic Engineering | December 2010 |
| New Off-Gas System Optimization | June 2013 |

GCT
Metallurgical Process Specialists

# Meltshop Emissions Reduction
# Basic and Detailed Engineering

## Meltshop Fume Collection System Study

**Client:** **Gerdau MACSTEEL**
**Location:** **Jackson, MI**

Basic and Detailed Engineering of modifications designed to ensure the client can maintain compliance with the EPA opacity mandate while continuing operation of the furnaces in the existing meltshop

**Scope of Work**

- Implement draft control on both EAFs
- Modify building roof vents to eliminate enclose the EAF aisle
- Install a partition in the EAF aisle to prevent drift of fumes
- Upgrade the baghouse by:
    - Replacing the reverse air fan and motor
    - Installing new reverse air duct and dampers
    - Installing new differential pressure transmitters on each compartment to measure the pressure drop across the bags.
    - Installing new polyester bags with PTFE membrane in all compartments
- Installing new main fans impellers to achieve a higher flow rate

*Modified Baghouse Reverse Air System*

**Project History**

| | |
|---|---|
| Study Complete | July, 2008 |
| Basic Engineering | April, 2009 |
| Detail Engineering | April, 2010 |

GCT
Metallurgical Process Specialists

# Meltshop Emissions Reduction Case History

## DEC System Peak Shaver Detail Design

**Client:** **NORTHSTAR BLUESCOPE STEEL**
**Location:** **Delta, OH**

Detail design of an in-duct peak shaver spray system to evaporatively cool the DEC off-gas to improve DEC fume capture

**Design Basis Definition:**

- Off-gas measurements to quantify existing off-gas heat loads.
- Furnace and off-gas mass and energy balances to quantify future off-gas heat loads and required spray rates.

- **Equipment Selection and Detail Design:**
  - Nozzle sourcing and selection.
  - Air and water line sizing, instrumentation, and control system design.
  - Peak shaver location, nozzle orientation, and equipment layout design.
  - System commissioning.

*Commissioning: Visual Inspection of Peak Shaver Spray Pattern with Nozzles Pulled Out of DEC Duct*

**Project History**
Installed September 2003

GCT
Metallurgical Process Specialists

# Meltshop Emissions Reduction Case History

## Canopy Hood Detail Design

**Client:** **Gerdau Ameristeel**
**Location:** **Midlothian, TX**

Re-design of the existing EAF canopy hoods and plenum design to allow full system capacity to be used for one furnace. Evaluation of EAF charging fume capture.

- **CFD modeling of entire melt shop including:**
  - Impact of individual heat sources on hood capacity.
  - Model calibration via ventilation survey.
- **Canopy hood detail design:**
  - Concepts based on CFD modeling.
  - Detail engineering of hood, plenum and duct modifications.
  - Damper control strategy for exhaust control.
  - Equipment specifications and selections.
- **Construction technical assistance and start-up.**
- **Evaluation of system performance.**

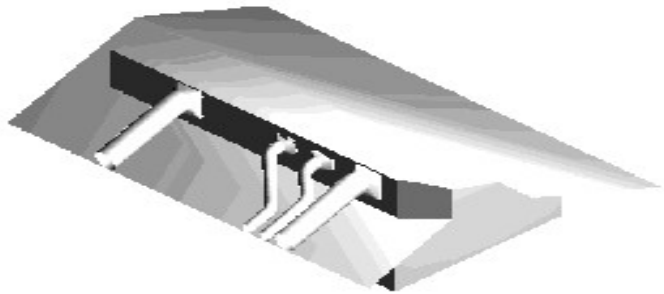

*Melt Shop Roof Plenum and Ducts – 3D AutoCAD*

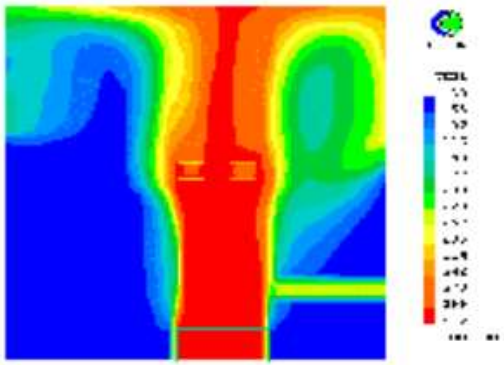

*EAF Charging Fume Capture CFD Model*

**Project History**

| | |
|---|---|
| Study Complete | 1999 |

GCT
Metallurgical Process Specialists

# Meltshop Emissions Reduction Case History

## Baghouse Expansion Detailed Cost Estimate

**Client:** **Gallatin Steel**
**Location:** **Ghent, KY**

Developing a detailed capital cost estimate for implementation of a new baghouse system with associated equipment for an Electric Arc Furnace meltshop

- **Air Pollution Control Systems Review:**
  - System pressure losses and flow distribution model using AFT's Fathom software.
  - Canopy hood performance evaluation using CFD modeling.
  - Evaluating existing system capacity and limitations.

- **Equipment Sizing and Costing**
  - Furnace and off-gas system mass and energy balances.
  - Equipment sizing and material take-offs
  - Obtaining firm bids for major equipment items
  - Develop a definitive cost estimate

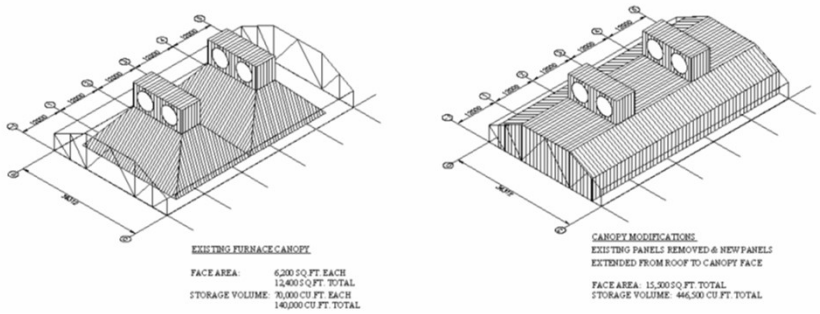


*Recommended Canopy Hood Modifications*

**Project History**
Study Complete June 2004

GCT
Metallurgical Process Specialists

# Integrated Steel Mill Case History

## BOF Off-Gas System Evaluation

**Client: Arcelor-Mittal - Cleveland**
**Location: Cleveland, OH**

Evaluate performance of existing #2 BOF Off-gas system
Identify system limitations and provide recommendations for optimizing performance.

### BOF Off-Gas System Review

- Evaluate the current BOF off-gas system
- Recommend modifications designed to
  - Improve the performance of the BOF evaporative cooling system
  - Reduce the rate of system air infiltration
  - Optimize draft control
  - Improve flow distribution between the ESPs
  - Improve monitoring of off-gas system operation

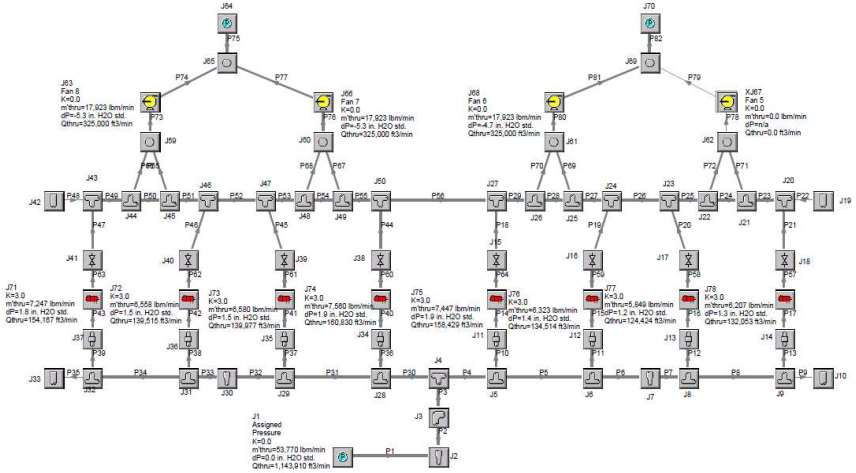

*BOF Off-Gas System Pressure Loss Modeling*

**Project History**

Study Complete March 2014

GCT
Metallurgical Process Specialists

# Integrated Steel Mill Case History

## Blast Furnace Casthouse Fume Collection Basic Engineering

**Client:** **Arcelor-Mittal - Burns Harbor**
**Location:** **Chicago, IL**

Fume collection system design and cost estimate for the casthouse

- **Develop a Computational Fluid Dynamic Model of the Casthouse**
  - Develop tapping hood concept and implement in CFD model
  - Optimize tapping hood design and exhaust rate to meet capture efficiency requirements
  - Evaluate need for trough covers

- **Engineering of Fume Collection System**
  - General arrangement drawings
  - Civil/Structural drawings
  - Electrical drawings
  - Process Instrumentation and Controls
  - Develop specifications for major equipment

- **Prepare Capital Cost Estimate +/- 20% accuracy**

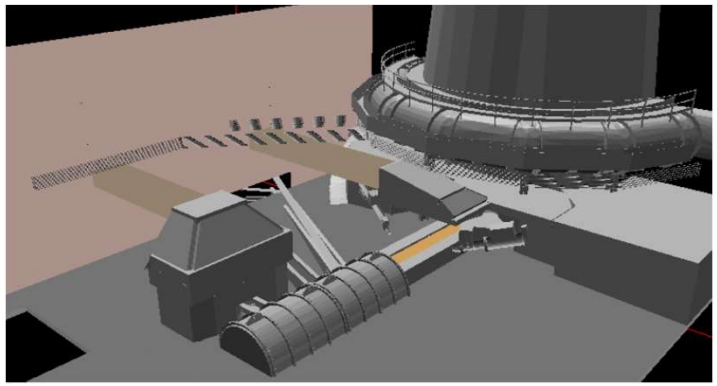

*CFD Model Geometry*

**Project History**

Study Complete March 2004

GCT
Metallurgical Process Specialists

# Integrated Steel Mill Case History

## BOF#3 Capture System Engineering Study

**Client:** **Arcelor-Mittal – Burns Harbor**
**Location:** **Chicago, IL**

Evaluate the existing primary off gas system (suppressed combustion hood) on the BOF

- **Evaluate the existing primary off gas system:**
  - Analysis of the existing BOF off-gas system
  - Process flow diagrams for the primary off gas system at existing and design furnace blow rates

- **Provide Recommendations to increase the system reliability and availability.**
  - Options and recommendations for suppressed combustion hood improvements
  - Conceptual designs and mechanical layouts
  - Cost estimate for the recommended system

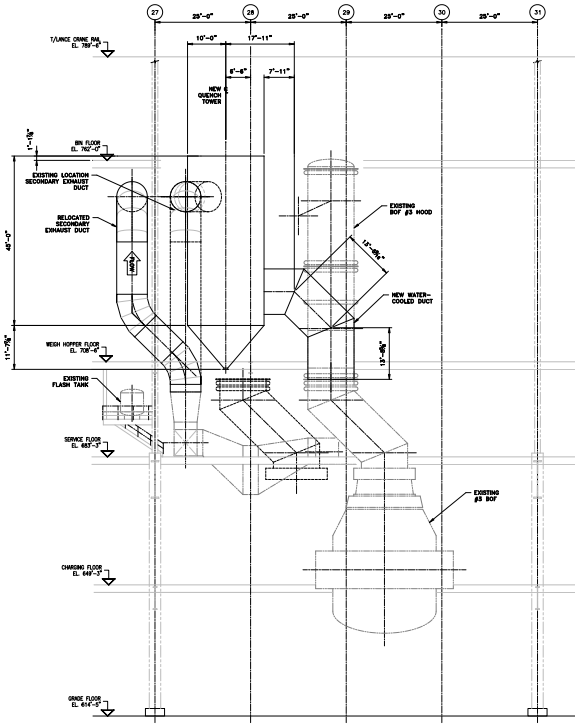


*Recommended Vertical Quench Tower*

**Project History**
Study Complete September 2004

GCT
Metallurgical Process Specialists

# Integrated Steel Mill Case History

## BOF Off-Gas System Evaluation

**Client: Arcelor-Mittal – Riverdale**
**Location: Chicago, IL**

Evaluate the performance of the BOF off-gas system and make recommendations for incremental improvements. Assist Arcelor-Mittal in determining the most effective path forward to achieve the long term system performance goals.

**Evaluate the existing primary off gas system**

- Develop fume collection system process flow diagram.
- Provide Recommendations to improve operation of the cooling tower
  - Process design requirements of the cooling tower.
  - Spray lance arrangement and nozzle specifications
  - Cost estimate for the recommended modifications
- Develop options to improve water-cooled hood performance

**Evaluate the existing fugitive emission system**

- Field measurements to define current hood exhaust rates
- Develop fume collection system process flow diagram
- Provide recommendations to improve performance of the fugitive emission system

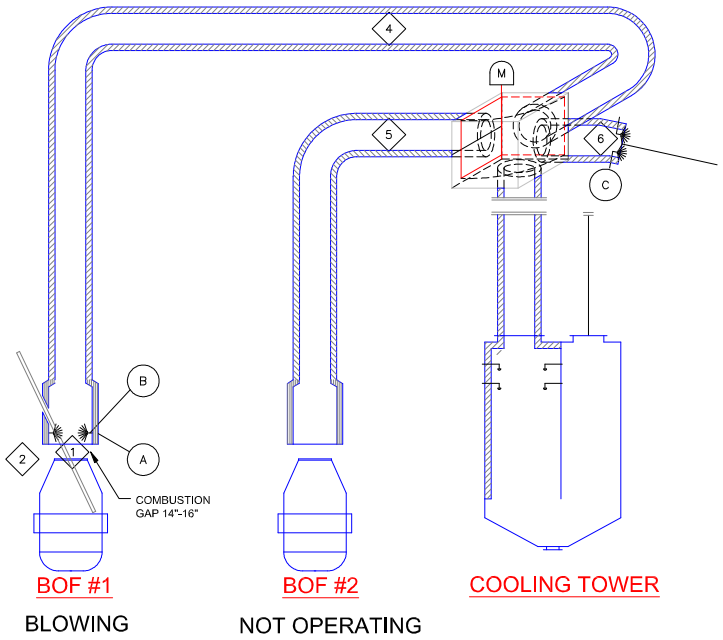


*BOF Primary System Flow Diagram*

**Project History**

| | |
|---|---|
| Cooling Tower Modifications | June 2004 |
| Updated BOF Off-Gas System Evaluation | April 2013 |
| Fugitive Emission System Improvements | March 2014 |

GCT
Metallurgical Process Specialists

# Integrated Steel Mill Case History

## BOF Secondary Emissions Control System Study

**Client:** **Arcelor-Mittal - Riverdale**
**Location:** **Riverdale, IL**

Evaluate the performance of the existing BOF secondary emissions system and make recommendations to improve system performance and reduce fugitive emissions

- **Secondary emissions control system evaluation**
  - Evaluate the current secondary system hoods
  - Perform pressure loss modeling of the system using AFT Fathom software
  - Recommend modifications to improve capture at the various collection points

- **Order-of-Magnitude capital cost estimate for implementing recommended modifications**

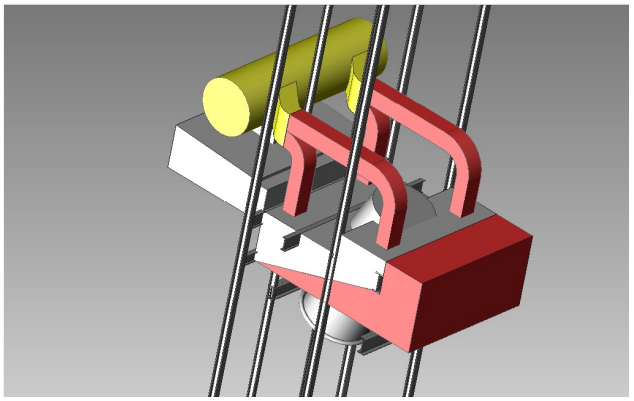

*New Secondary Hood Concept Sketch*

**Project History**

Study Complete September 2007

GCT
Metallurgical Process Specialists

# Integrated Steel Mill Case History

## BOF Spray Cooling System Basic Engineering and LMF Off-Gas System Review

**Client:** **Arcelor-Mittal - Indiana Harbor**
**Location:** **East Chicago, IN**

Evaluate the existing BOF and LMF off-gas systems and make recommendations to improve system performance

- **BOF Off-Gas System Review**
  - Evaluate the current BOF off-gas system
  - Recommend modifications to the BOF evaporative cooling system in order to decrease water consumption
  - Evaluate ESP performance at reduced gas moisture
  - Recommend modifications to improve off-gas system performance
  - Prepare Order of Magnitude cost estimate for proposed recommendations

- **LMF Off-Gas System Review**
  - Develop modifications for the LMF system to improve fume capture and reduce sinter carryover to the baghouse for the existing hoods.
  - Evaluate potential off-gas system modifications necessary to accommodate the future peripheral extraction hoods.

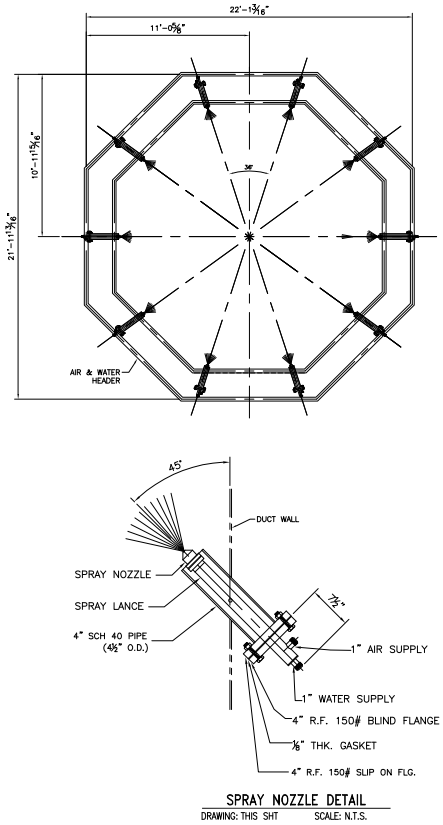


*Proposed Evaporative Cooling Nozzle Arrangement*

**Project History**

Study Complete March 2007

GCT
Metallurgical Process Specialists

# Integrated Steel Mill Case History

## BOF Spray System Modifications Basic Engineering

**Client:** **US Steel**
**Location:** **Granite City, IL**

Basic Engineering of BOF spray system modifications designed to improve spray water evaporation efficiency and provide consistent of off-gas conditioning performance.

**Evaluate the existing primary off gas system**

- Evaluate the existing spray system in detail to determine which components require upgrades
- Determine the ideal location in the existing spray tower for the spray lances
- Determine required air and water requirements for the modified system
- Provide a capital cost estimate for the modifications

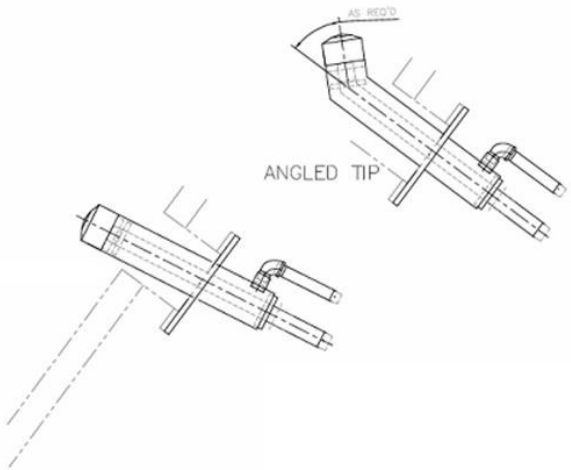


*Alternative Spray Nozzle Configurations*

**Project History**
Project Complete October 2008

GCT
Metallurgical Process Specialists

# Integrated Steel Mill Case History

## BOF Primary Off-Gas System Optimization

**Client:** **US Steel**
**Location:** **Granite City, IL**

Evaluate the BOF primary off-gas system and develop a model that can used by plant personnel to determine the optimal spray rates and steam injection rates required to maximize performance of the ESP over a variety of ambient conditions and operating scenarios.

**Evaluate the existing primary off gas system**

- Collect Field measurements and operating data
- Evaluate the performance of the primary off-gas system
- Develop short and long term recommendations designed to improve the performance of the primary off-gas system

**Process Model Development**

- Develop model to predict off-gas conditions exiting the BOF based on user inputs at each stage of operation
- Predict the optimal off-gas operating parameters to maximize the ESP performance

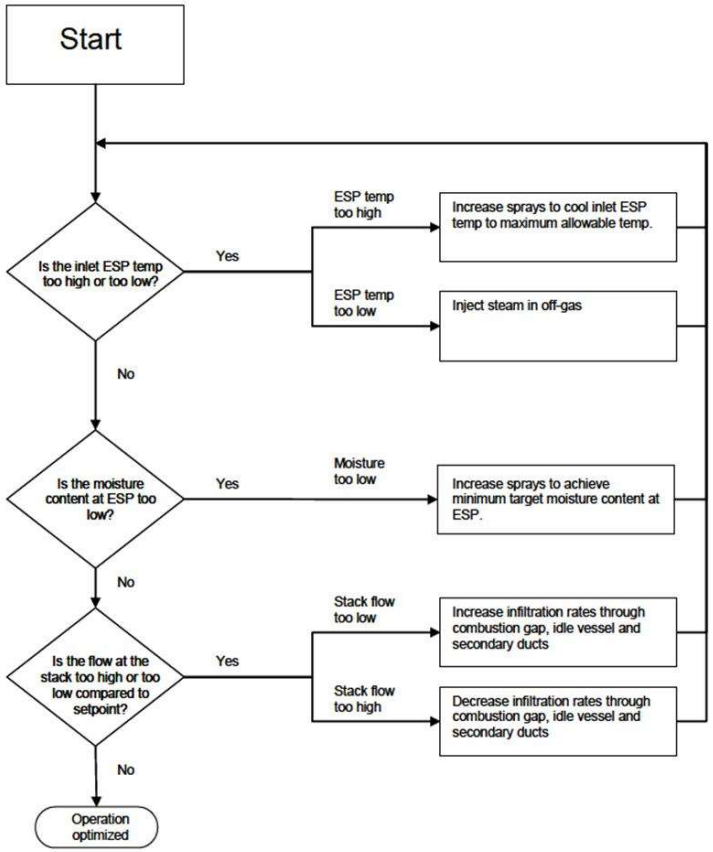


*BOF Model Control Logic Diagram*

**Project History**

Model Complete July 2008

GCT
Metallurgical Process Specialists

# Integrated Steel Mill Case History

## HIsmelt Fume Extraction System Upgrades

**Client:** **Rio Tinto HIsmelt**
**Location:** **Kwinana, Australia**

Design and Detail Engineering of New Fume Extraction Hoods

Project Work Includes:
- Complete analysis and evaluation of the current fume extraction system operation
- Recommend modifications to existing fume extraction system
    - Improve fugitive emission capture
    - Reduce maintenance requirements
- Develop new fume extraction hood designs
    - Improved fugitive emission capture
    - Utilize the existing fume extraction baghouse system
- CFD modeling of the hood concepts
    - Determine required hood exhaust rates
    - Predict fugitive emission rates
- Detail design of hood concepts
    - Metal tapping and transfer launder hoods
    - Casting station and launder hoods
    - Slag tapping and transfer launders hoods
    - Desulphurization station hoods

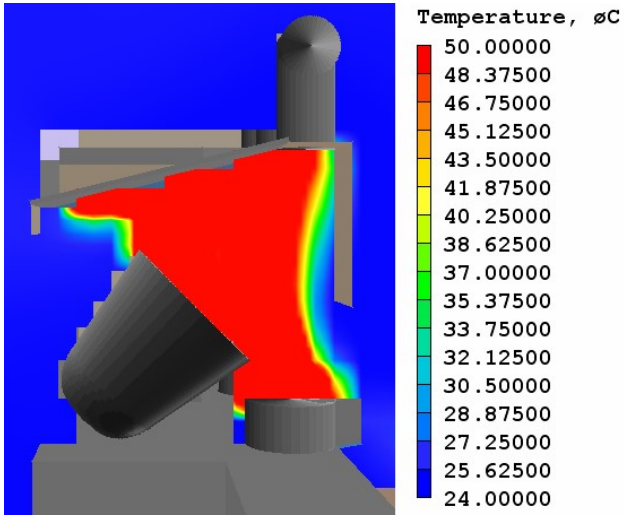


CFD Modeling of Hood Concept

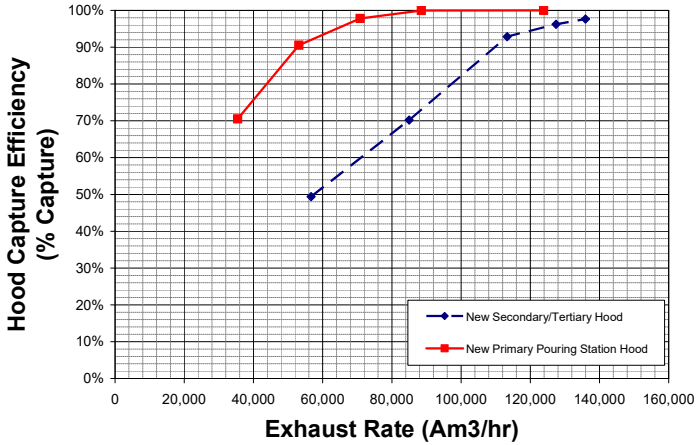


**Project History**

| | |
|---|---|
| Conceptual Engineering | February 2007 |
| Detail Engineering | December 2007 |

GCT
Metallurgical Process Specialists

# Heat Recovery Evaluations
# Case History

## Evaluation of Waste Heat Recovery Opportunities

**Client:** **Nucor Steel Corporate**
**Location:** **North Carolina, USA**

### Project Scope

- Explore potential areas of heat recovery in steelmaking operations with a goal of reducing total energy consumption
- Conduct a preliminary evaluation for each scenario including:
  - Technology evaluation
  - Feasibility of opportunities
  - Order-of-magnitude CAPEX
- Select one or two technologies most suited for Nucor operations
- Develop an implementation plan for site adaptation

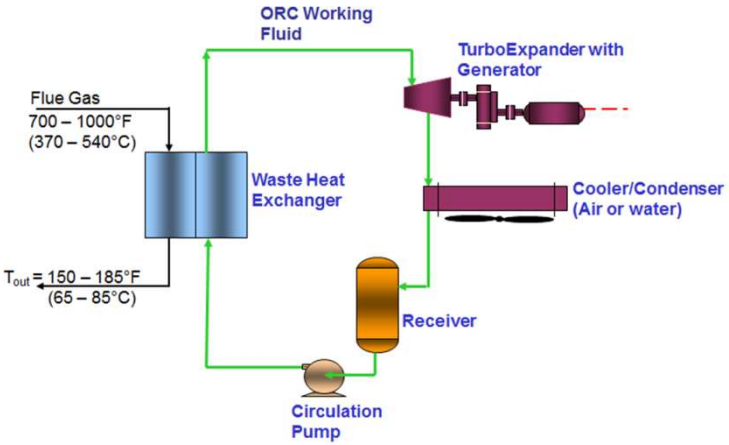


### Project Outcome

- Organic Rankine Cycle (ORC) Heat Recovery identified as potentially promising
- Proceed with additional evaluation of ORC heat recovery on EAF and Reheat Furnace Off-Gas systems

**Project History**

Ongoing - Initial Work began in 2008

GCT
Metallurgical Process Specialists

# Heat Recovery Evaluations
# Case History

## EAF and Re-Heat Furnace Off-Gas Waste Heat Recovery

**Client:** **NatSteel**
**Location:** **Singapore**

Conceptual and Basic Engineering for waste heat recovery systems for EAF and Re-heat furnace off-gas.

- Develop Process Design Basis
- Establish Primary Off-Gas Cleaning System Design
- Establish Primary Off-Gas Heat Recovery Potential
- Evaluate System Modifications to Reduce Gas Volume and Increase Temperatures
- Evaluate Various Heat Recovery Options for High Grade and Low Grade Waste Heat Recovery
- Benchmark Gas Cleaning and Waste Heat Recovery Systems with Similar Operations
- Develop General Arrangement Drawings
- Develop Capital Cost Estimate to +/- 25% Accuracy
- Calculate Project Economics

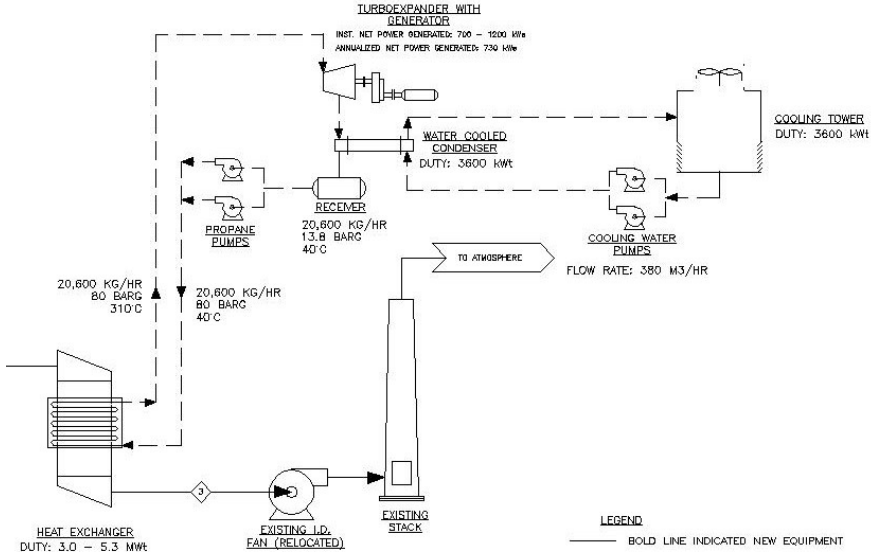


*Direct Organic Rankine Cycle Heat Recovery System*

**Project History**

| | |
|---|---|
| Conceptual Engineering | August 2010 |
| Basic Engineering | February 2011 |

GCT
Metallurgical Process Specialists

# Heat Recovery Evaluations
# Case History

## Re-Heat Furnace Waste Heat Recovery System

**Client:** **NatSteel**
**Location:** **Singapore**

Project includes:

- Installation of ORC system
- Single RHF application
- Direct Heat Exchange ORC
- Power production: up to 0.6 MW
- Cooling system design
- Layout and ductwork optimization

Project Outcome

- Construction completed within 17 months after receipt of order (ARO).
- Zero reported accidents or incidents.
- Commissioning and start-up period January 2013.

| | **Project History** |
|---|---|
| Conceptual Engineering | 2010 |
| Basic & Detailed Engineering | 2011 - 2012 |
| Procurement & Construction | 2012 |
| Start-up | Jan 2013 |

GCT
Metallurgical Process Specialists

# Heat Recovery Evaluations
# Case History

## EAF Off-Gas Waste Heat Recovery

**Client:** **NatSteel**
**Location:** **Singapore**

Conceptual and Basic Engineering for waste heat recovery systems for EAF off-gas.

- Develop Process Design Basis
- Establish Primary Off-Gas Cleaning System Design
- Establish Primary Off-Gas Heat Recovery Potential
- Evaluate System Modifications to Reduce Gas Volume and Increase Temperatures
- Evaluate Various Heat Recovery Options for High Grade and Low Grade Waste Heat Recovery
- Benchmark Gas Cleaning and Waste Heat Recovery Systems with Similar Operations
- Develop General Arrangement Drawings
- Develop Capital Cost Estimate to +/- 25% Accuracy
- Calculate Project Economics

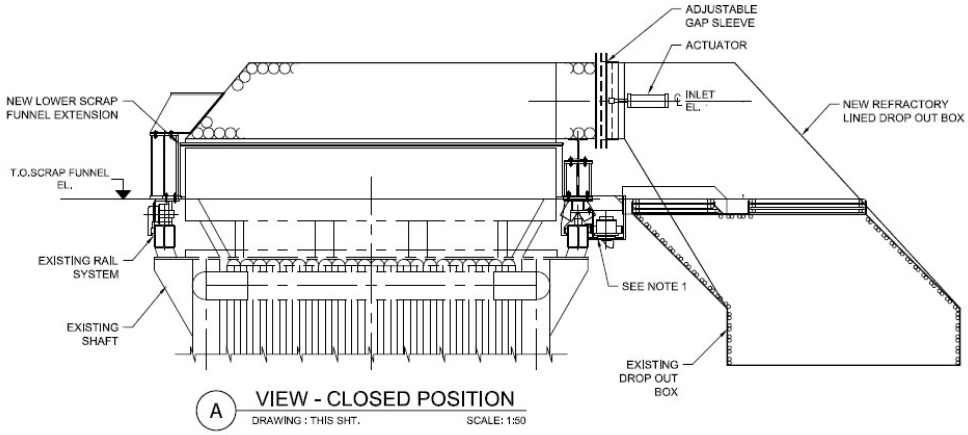


*Proposed EAF Shaft Modifications to Reduce Air Infiltration*

**Project History**

| | |
|---|---|
| Conceptual Engineering | August 2010 |
| Basic Engineering | February 2011 |

GCT
Metallurgical Process Specialists

# Energy Footprint Assessment
# Case History

## Process Energy Intensity Evaluation

**Client:** **Nucor Steel Corporate**
**Location:** **North Carolina, USA**

- (17) facilities across the United States.
- Energy input represents a major operating cost, and energy efficiency varies significantly from furnace to furnace and meltshop to meltshop.
- Visited each Nucor meltshop
    - Conducted an analysis of furnace energy utilization for each electric arc furnace and reheat/tunnel furnace
    - Generated an energy balance diagram with overview of the furnace energy inputs and outputs
    - Quantified off-gas heat load and volumetric flow rates
- GCT conducted a 1.5-day seminar in Charlotte with key operating and environmental personnel from each of the meltshops. At the seminar, GCT held general discussions on the operation of furnaces, presented the results of the energy analysis at each facility, and provided recommendations and strategies to better monitor, control, and minimize energy intensity

**Project History**

| | |
|---|---|
| Site Work | January – July 2006 |
| Seminar | September 2006 |

GCT
Metallurgical Process Specialists

# Energy Footprint Assessment Case History

## Integrated Steel Mill Energy Footprint Optimization

**Client:** **ArcelorMittal Dofasco**
**Location:** **Hamilton, ON Canada**

Perform a study to evaluate overall site energy usage and predict future plant energy footprint resulting from various changes to production and processes. Develop project opportunities to reduce energy consumption and the use of purchased fuels

- Develop interactive model to compare plant wide energy requirements for various scenarios
  - Validate model based on previous year site data
    - Model used to evaluate options to:
      - Minimize purchased fuel (NG, Electricity, Oil)
      - Minimize flare
      - Optimizing the steam system (generation, distribution and use)
      - Develop recommendations for the best utilization of available energy sources
- Identify project opportunities designed to reduce energy consumption and external fuel purchases
  - Evaluate viable option based on project readiness, ease of implementation, risk
    - Evaluate project economics
    - Order-of-magnitude CAPEX / OPEX estimates
      - Annual savings
      - Project ROI / Payback

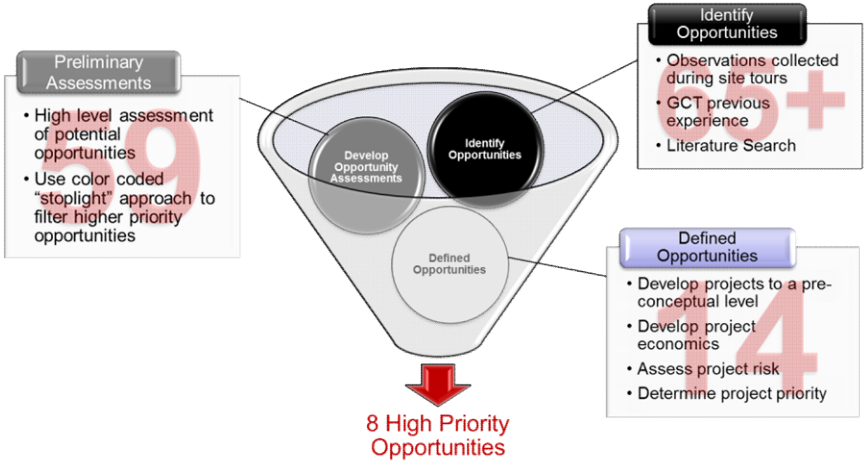


**Project Opportunity Assessment Approach**

**3.4 M**
GJ Reduction in Energy Footprint

**5%**
Reduction in Energy Footprint

**904,000**
GJ Electrical Savings

**$22 M**
Purchased Electricity Savings

**Summary of Project Outcome**

GCT
Metallurgical Process Specialists

# CFD Modeling Case History

## CFD Modeling

### Canopy Hood Design and Optimization

- Nucor Jewett – Jewett, Texas
- Nucor-Yamato Steel – Blytheville, Arkansas
- Nucor Berkeley – Huger, South Carolina
- Structural Metals, Inc. – Seguin, Texas
- Gallatin Steel Co. – Ghent, Kentucky
- Evraz – Pueblo, Colorado

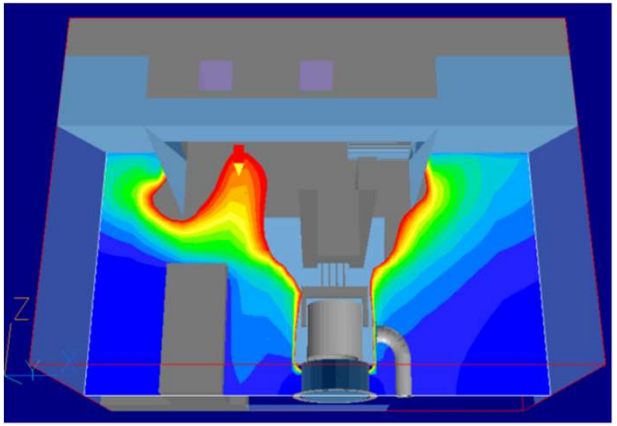

### Smelting Furnace Secondary Hood Design

- Pirdop Smelter – Bulgaria
- Atlantic Copper – Spain
- Xstrata Nickel – Canada
- Xstrata Copper – Canada

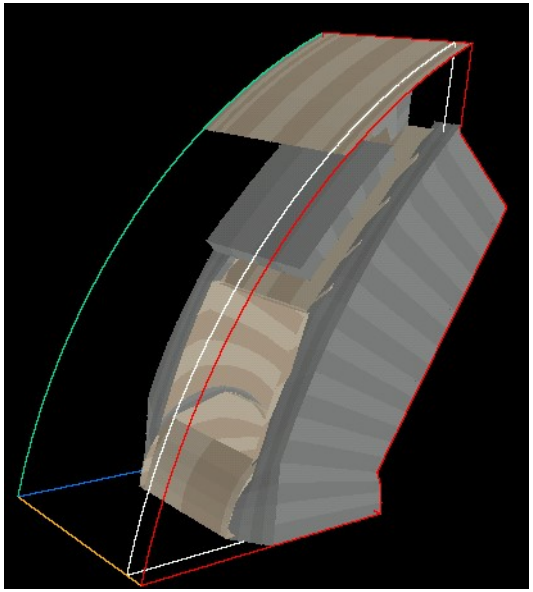

GCT
Metallurgical Process Specialists

# CFD Modeling Case History

## CFD Modeling

**Client:** Rocky Mountain Steel Mills
**Location:** Pueblo, Colorado

Transient CFD Model for Canopy Hood Design as a Part of the Overall Assistance with New EAF Off-Gas System Design

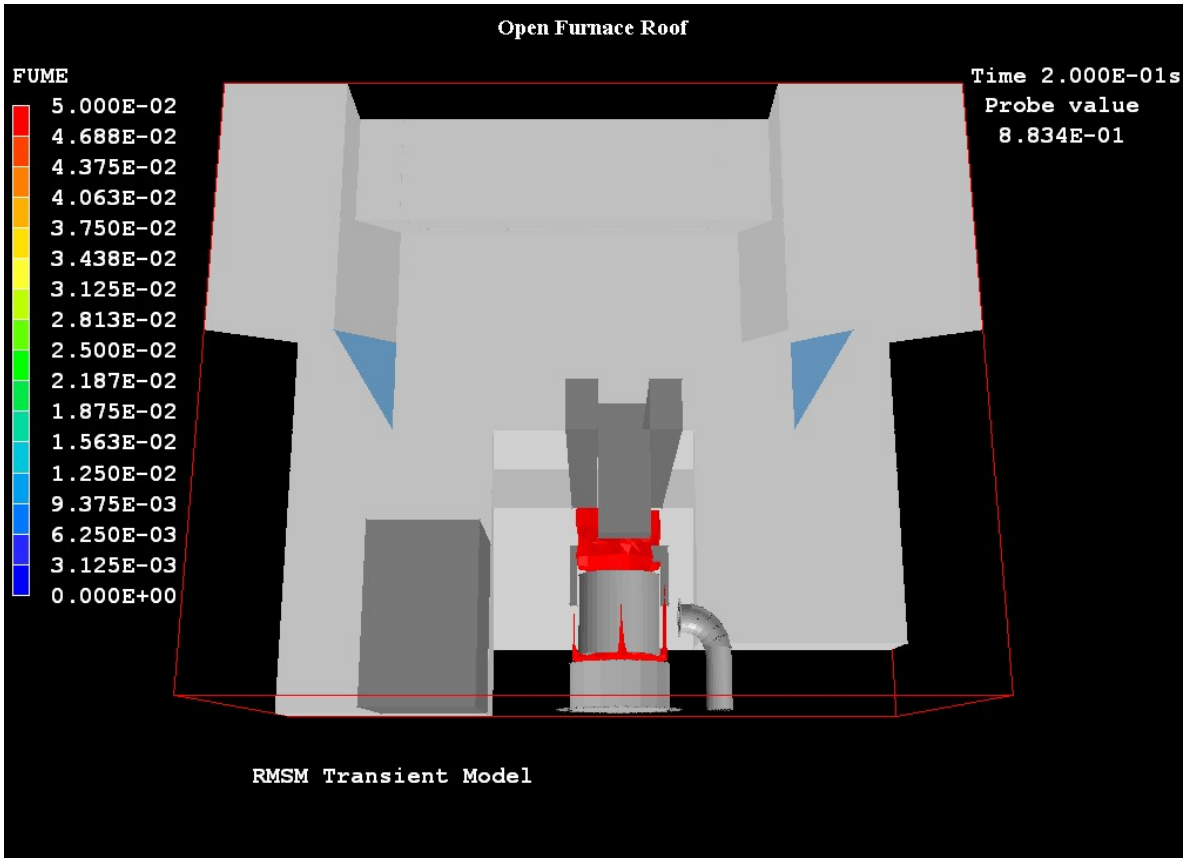


Transient fume capture profile for optimized hood

– Shows some fume spillage after charge is dropped; however, the model predicts up to 95% efficiency
– Steady state of the model predicted 82% efficiency before optimizing canopy hood geometry

GCT
Metallurgical Process Specialists

# Evaporative Cooling Systems Case History

## Evaporative Cooling System Design

**Client:** Nucor Steel
**Location:** South Carolina, USA

**Client:** Nucor Jewett
**Location:** Texas, USA

**Client:** Rocky Mountain Steel Mills
**Location:** Colorado, USA

**Client:** ArcelorMittal Steel
**Location:** Indiana, USA

**Client:** North Star BlueScope Steel
**Location:** Ohio, USA

**Client:** SSAB Steel
**Location:** Iowa, USA

**Client:** Xstrata Nickel - Falcondo
**Location:** Dominican Republic

**Client:** PT Vale Indonesia
**Location:** Indonesia

**Preliminary and Detailed Design and Commissioning of New Evaporative Cooling Systems. Installations Include Dedicated Spray Chambers and In-Duct Spray Systems.**

- Establish Process Gas Conditioning Requirements
- Equipment Sizing, Specification Preparation, and Bid Evaluation
- Detailed Engineering – Process, mechanical, and electrical/instrumentation
- Commissioning and Performance Testing